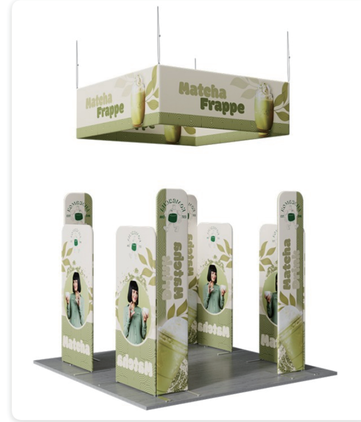
Matcha
Frappe
Matcha
Frappe

1 : 10

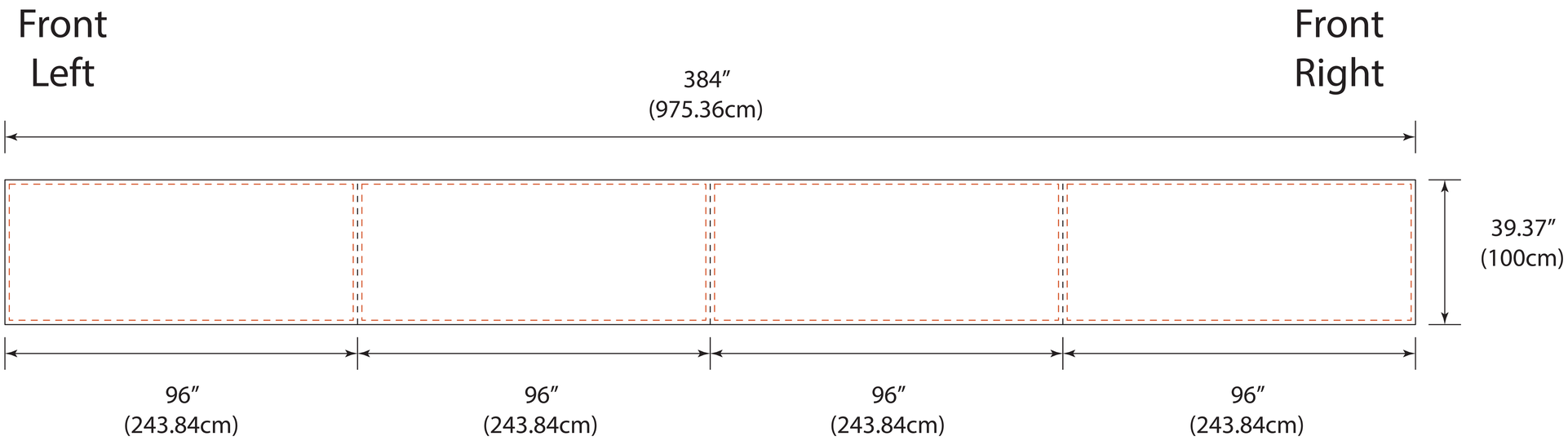
Front
Left
Front
Right
384″
(975.36cm)
39.37″
(100cm)
96″
(243.84cm)
96″
(243.84cm)
96″
(243.84cm)
96″
(243.84cm)

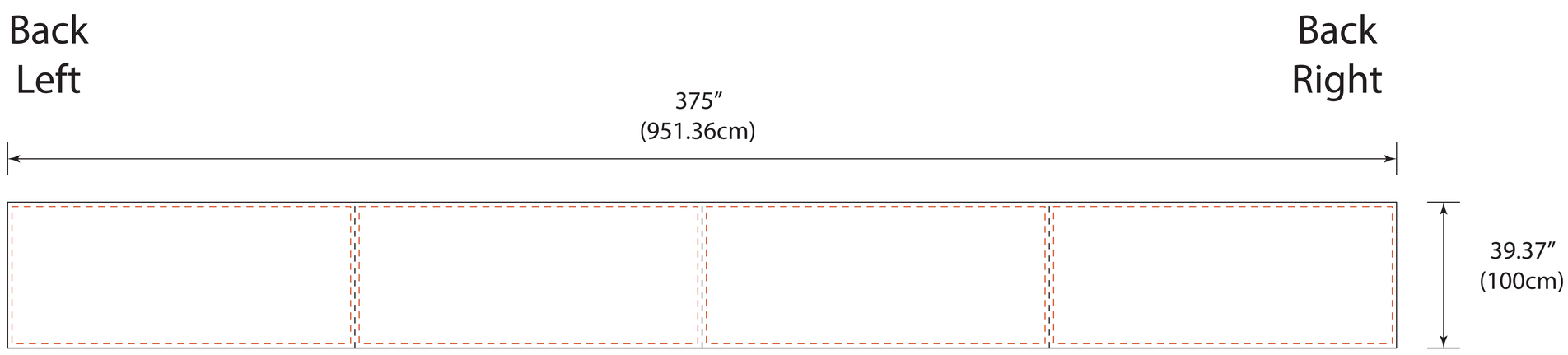
Back
Left
Back
Right
375″
(951.36cm)
39.37″
(100cm)

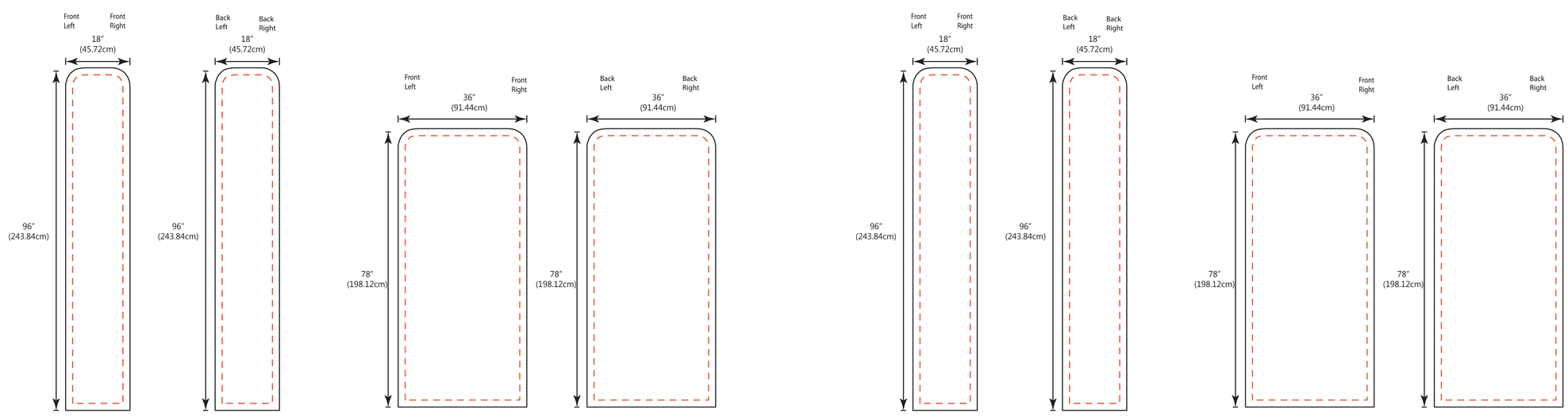
Front Left
Front Right
18″
(45.72cm)
96″
(243.84cm)
Back Left
Back Right
18″
(45.72cm)
96″
(243.84cm)
Front Left
Front Right
36″
(91.44cm)
78″
(198.12cm)
Back Left
Back Right
36″
(91.44cm)
78″
(198.12cm)
Front Left
Front Right
18″
(45.72cm)
96″
(243.84cm)
Back Left
Back Right
18″
(45.72cm)
96″
(243.84cm)
Front Left
Front Right
36″
(91.44cm)
78″
(198.12cm)
Back Left
Back Right
36″
(91.44cm)
78″
(198.12cm)

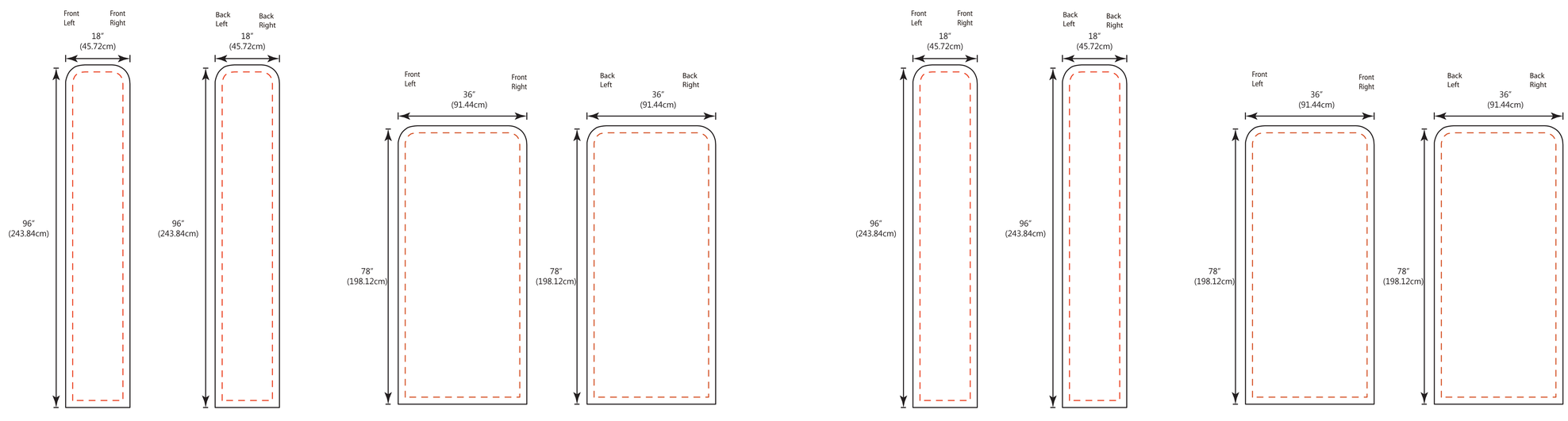
Front Left
Front Right
18″
(45.72cm)
96″
(243.84cm)
Back Left
Back Right
18″
(45.72cm)
96″
(243.84cm)
Front Left
Front Right
36″
(91.44cm)
78″
(198.12cm)
Back Left
Back Right
36″
(91.44cm)
78″
(198.12cm)
Front Left
Front Right
18″
(45.72cm)
96″
(243.84cm)
Back Left
Back Right
18″
(45.72cm)
96″
(243.84cm)
Front Left
Front Right
36″
(91.44cm)
78″
(198.12cm)
Back Left
Back Right
36″
(91.44cm)
78″
(198.12cm)