1:10

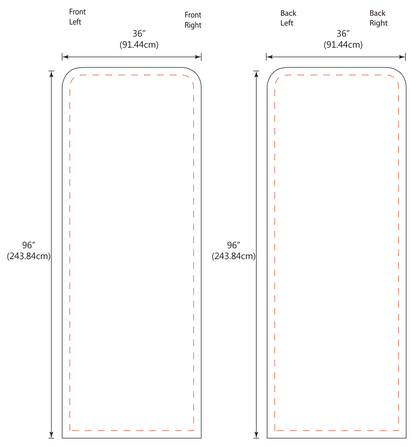
Front Left
Front Right
36″ (91.44cm)
96″ (243.84cm)

Back Left
Back Right
36″ (91.44cm)
96″ (243.84cm)

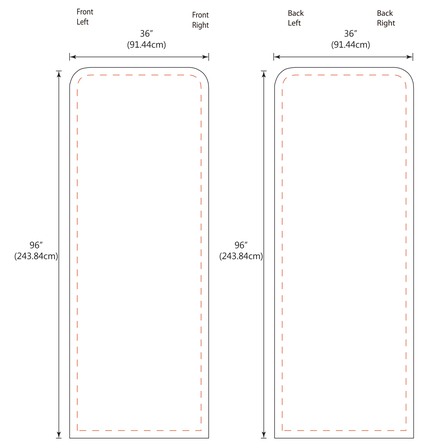
Front Left
Front Right
36″ (91.44cm)
96″ (243.84cm)

Back Left
Back Right
36″ (91.44cm)
96″ (243.84cm)

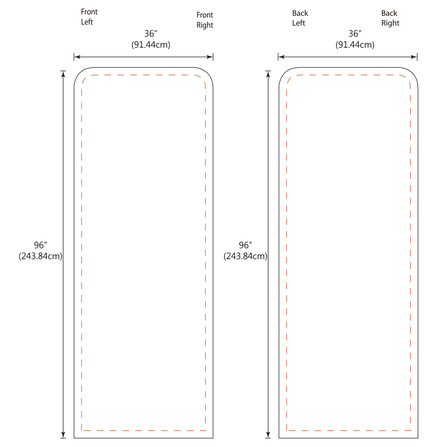
Front Left
Front Right
36″ (91.44cm)
96″ (243.84cm)

Back Left
Back Right
36″ (91.44cm)
96″ (243.84cm)

FIGHT UNTIL THE END
Be a Champion!
20 June

8FT*9.5FT

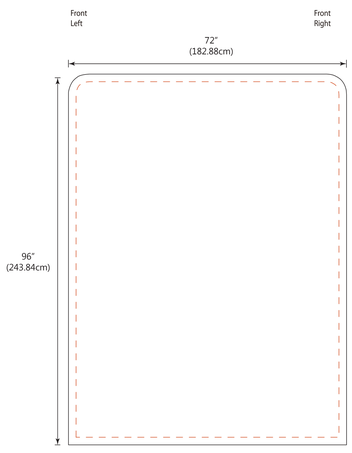
Front Left
Front Right
72″ (182.88cm)
96″ (243.84cm)

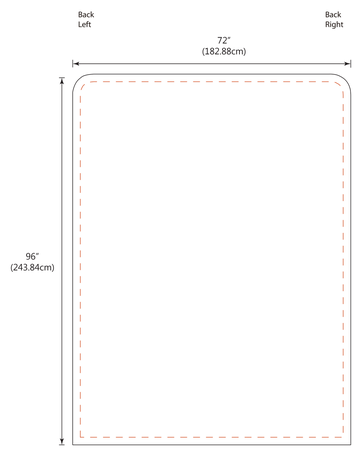
Back Left
Back Right
72″ (182.88cm)
96″ (243.84cm)

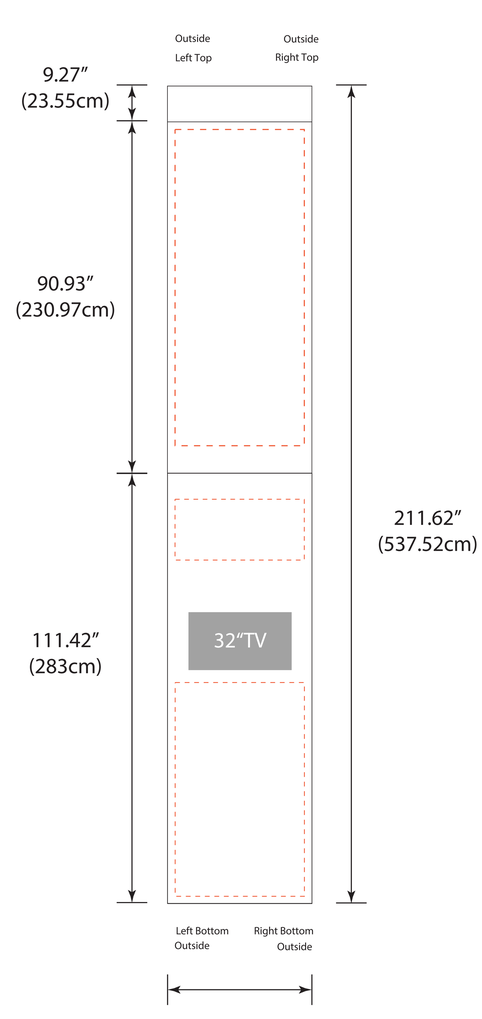
Outside Left Top
Outside Right Top
9.27″ (23.55cm)
90.93″ (230.97cm)
111.42″ (283cm)
211.62″ (537.52cm)
32″TV
Left Bottom Outside
Right Bottom Outside
37.4″ (95cm)

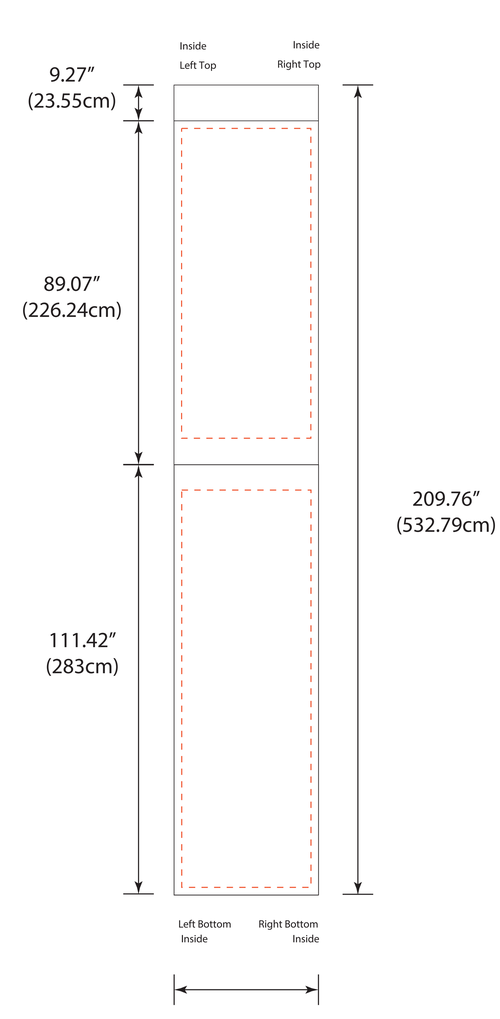
Inside Left Top
Inside Right Top
9.27″ (23.55cm)
89.07″ (226.24cm)
111.42″ (283cm)
209.76″ (532.79cm)
Left Bottom Inside
Right Bottom Inside
37.4″ (95cm)

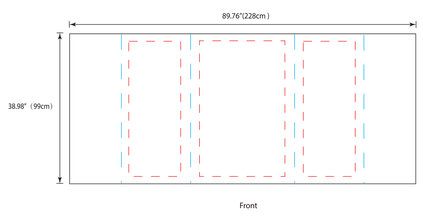
89.76″(228cm)
38.98″（99cm）
Front