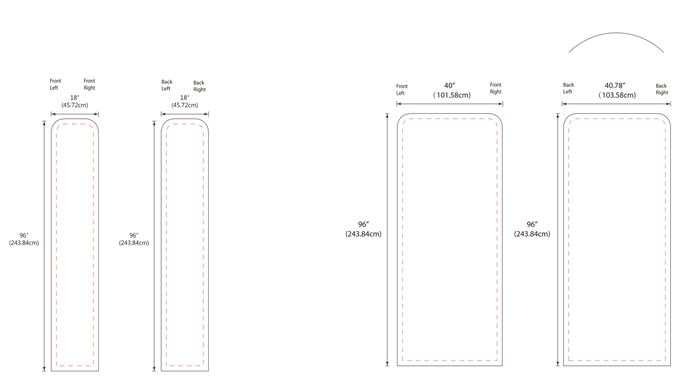

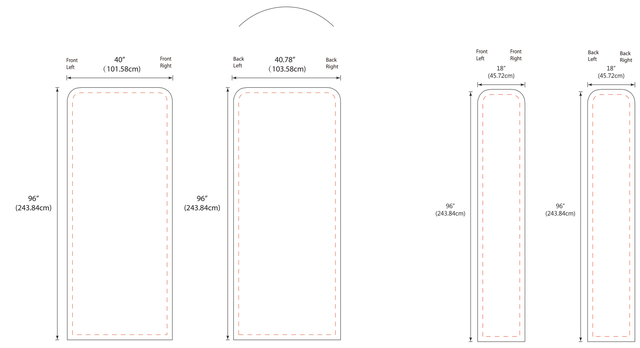

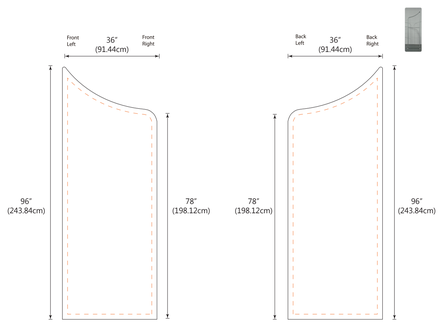

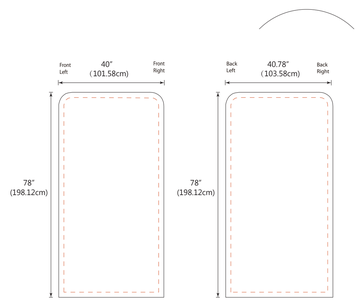

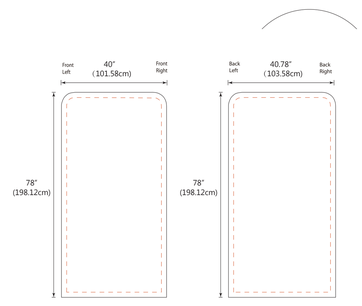

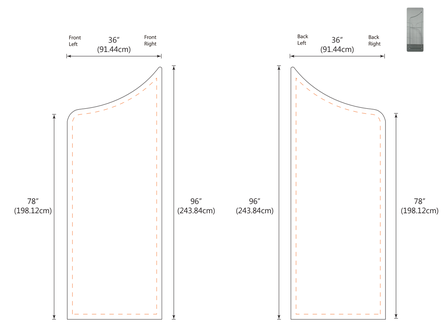

6.5FT*8FT

1:10

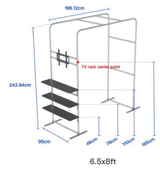

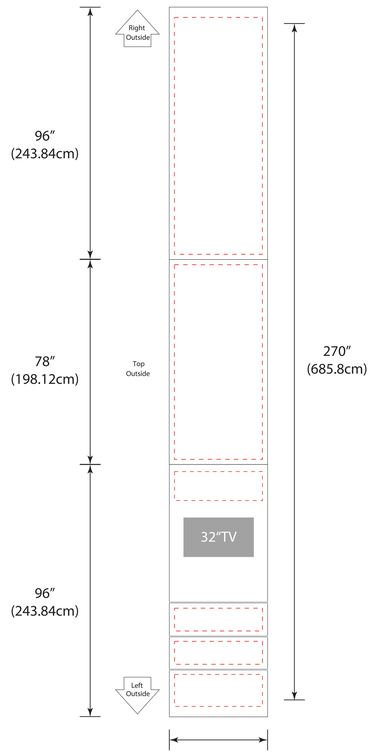

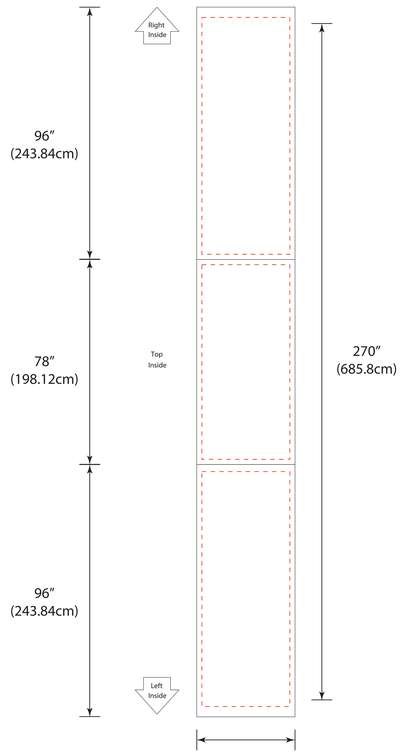

6.5FT*8FT
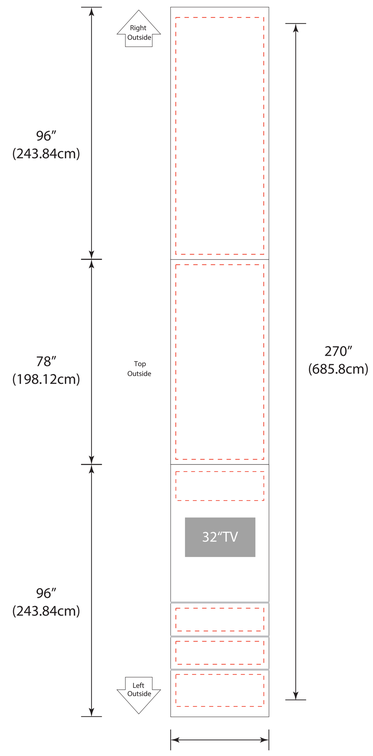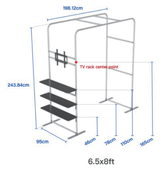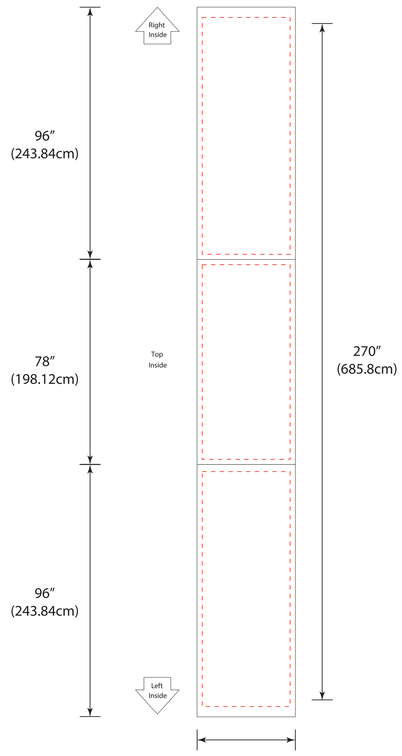
1:10