Aetherium
Aetherium

1:10

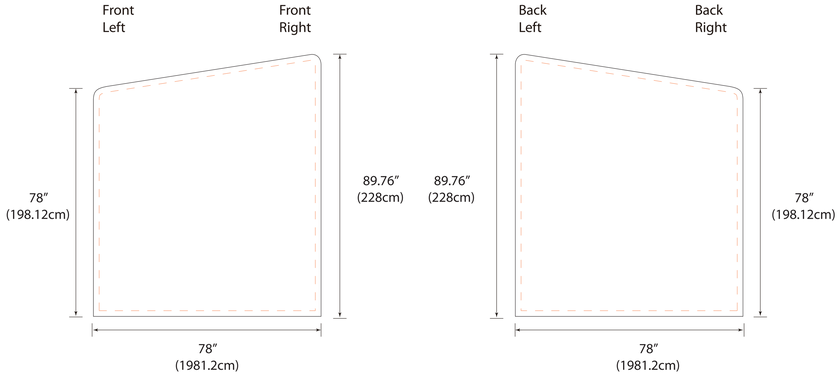
Front
Left
Front
Right
78″
(198.12cm)
89.76″
(228cm)
78″
(1981.2cm)
Back
Left
Back
Right
89.76″
(228cm)
78″
(198.12cm)
78″
(1981.2cm)

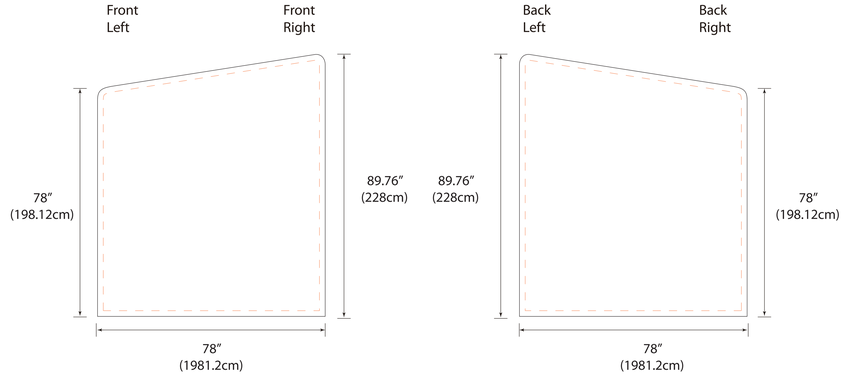
Front
Left
Front
Right
78″
(198.12cm)
89.76″
(228cm)
78″
(1981.2cm)
Back
Left
Back
Right
89.76″
(228cm)
78″
(198.12cm)
78″
(1981.2cm)

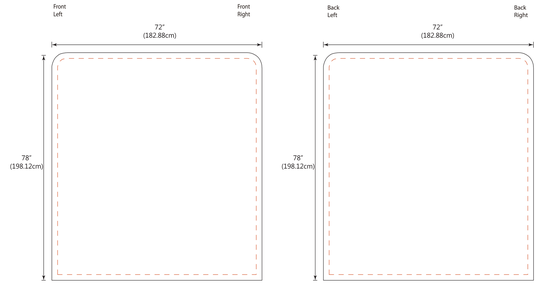
Front
Left
Front
Right
72″
(182.88cm)
78″
(198.12cm)
Back
Left
Back
Right
72″
(182.88cm)
78″
(198.12cm)

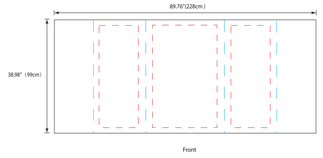
89.76″(228cm)
38.98″ (99cm)
Front

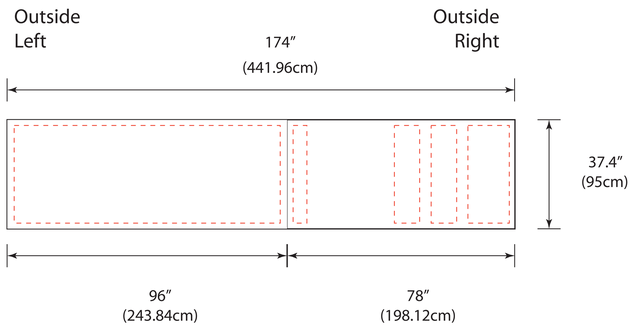
Outside
Left
174″
(441.96cm)
Outside
Right
37.4″
(95cm)
96″
(243.84cm)
78″
(198.12cm)

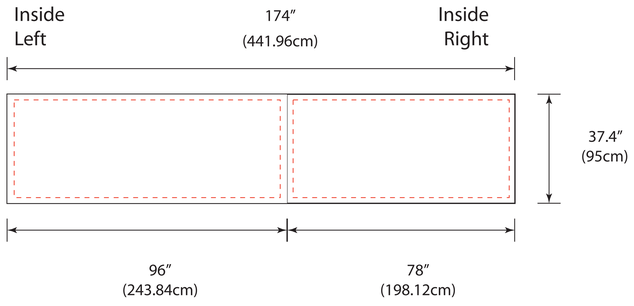
Inside
Left
174″
(441.96cm)
Inside
Right
37.4″
(95cm)
96″
(243.84cm)
78″
(198.12cm)