M

Front

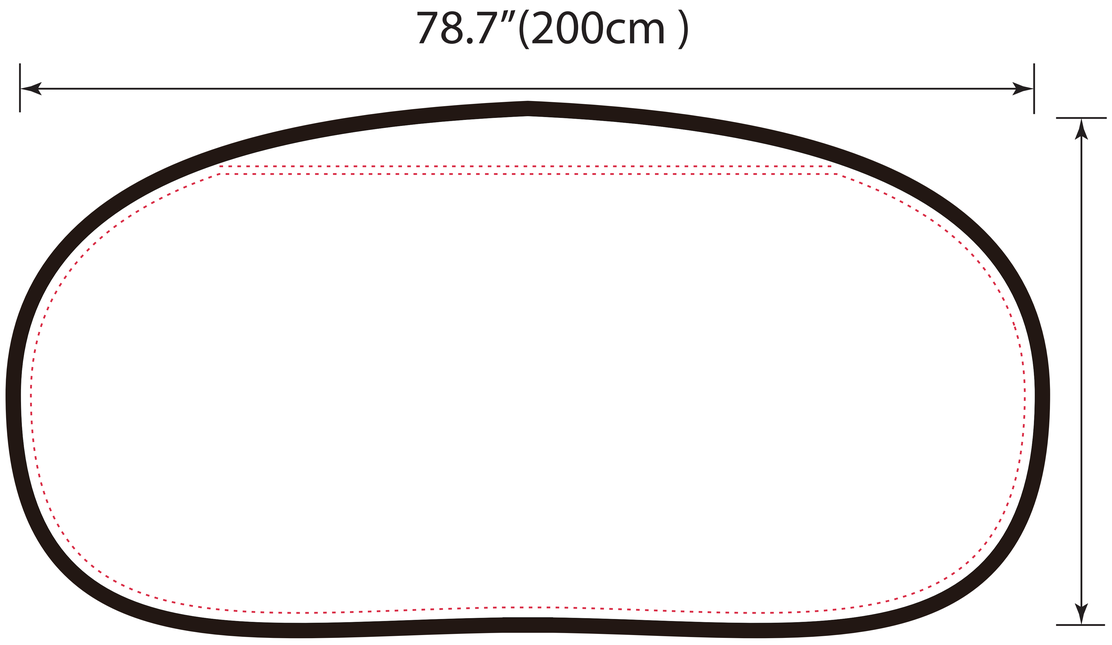

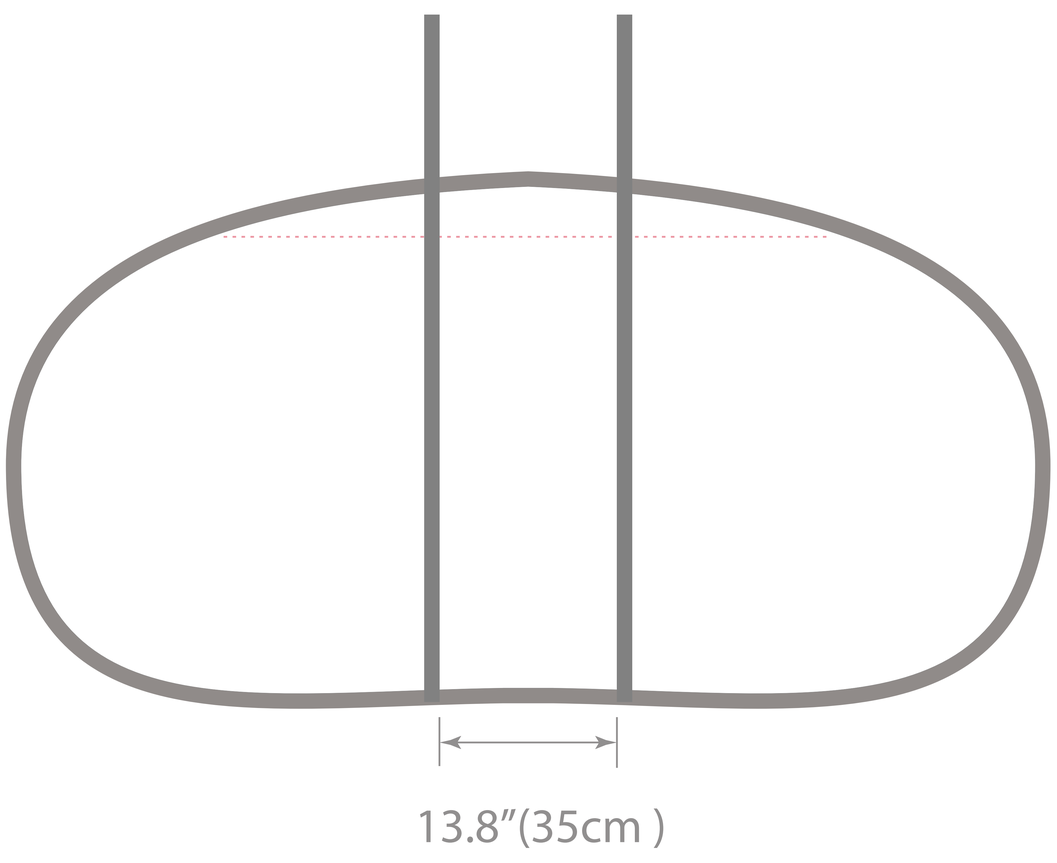
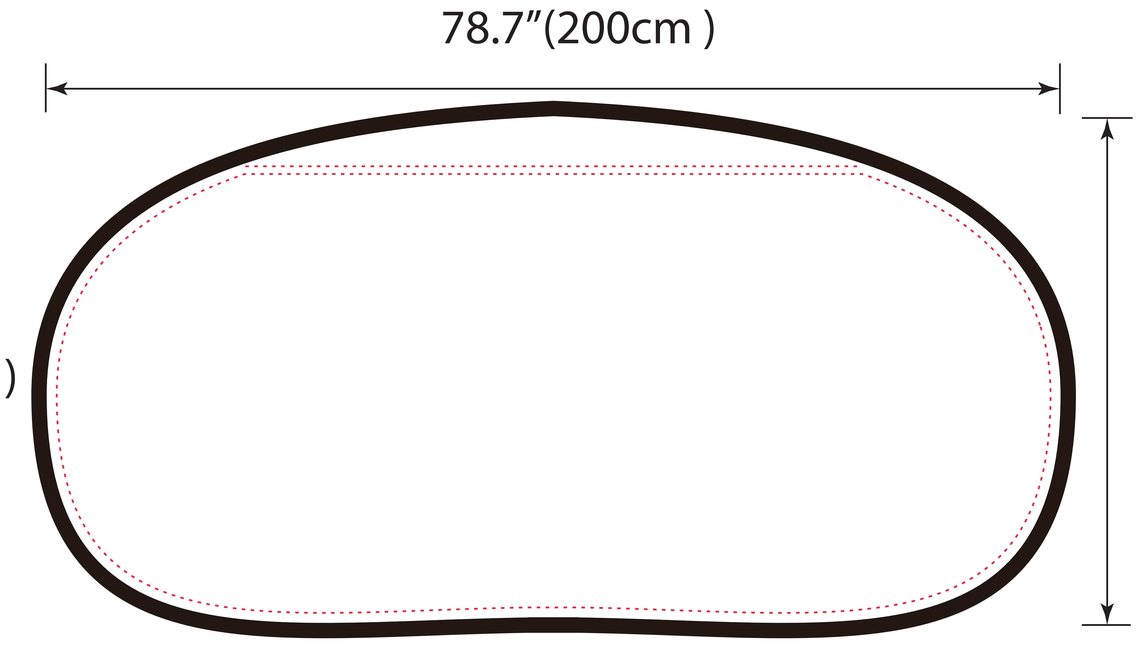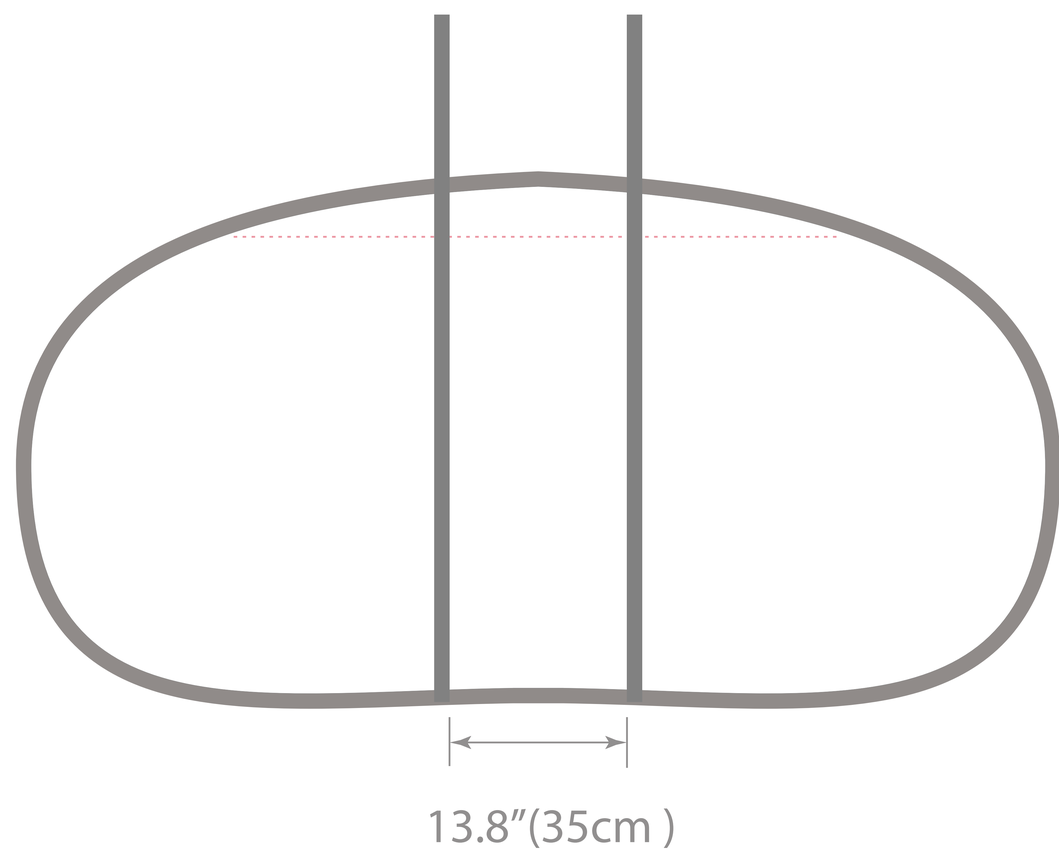
Back