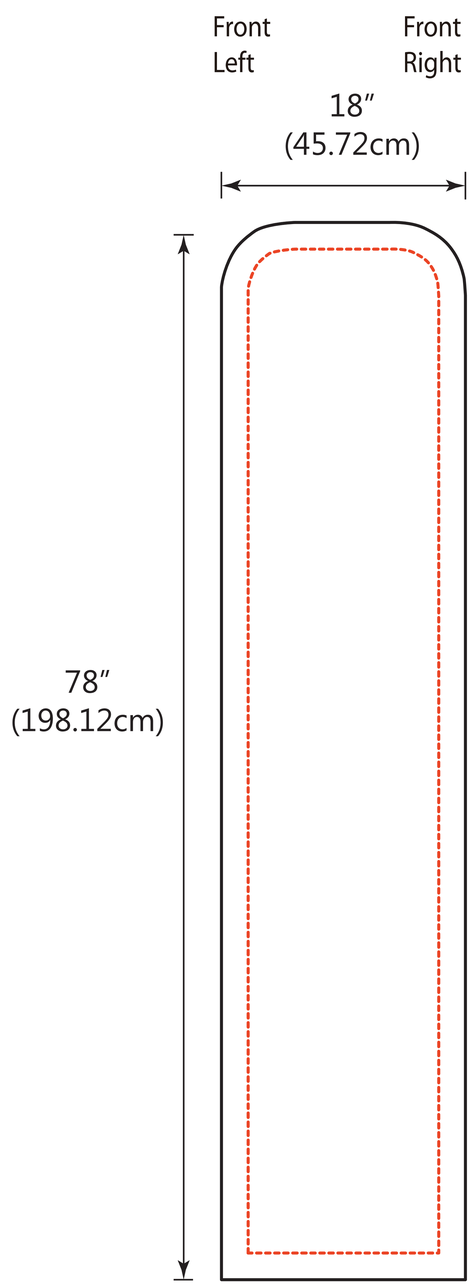
Front
Left
Front
Right
18″
(45.72cm)
78″
(198.12cm)

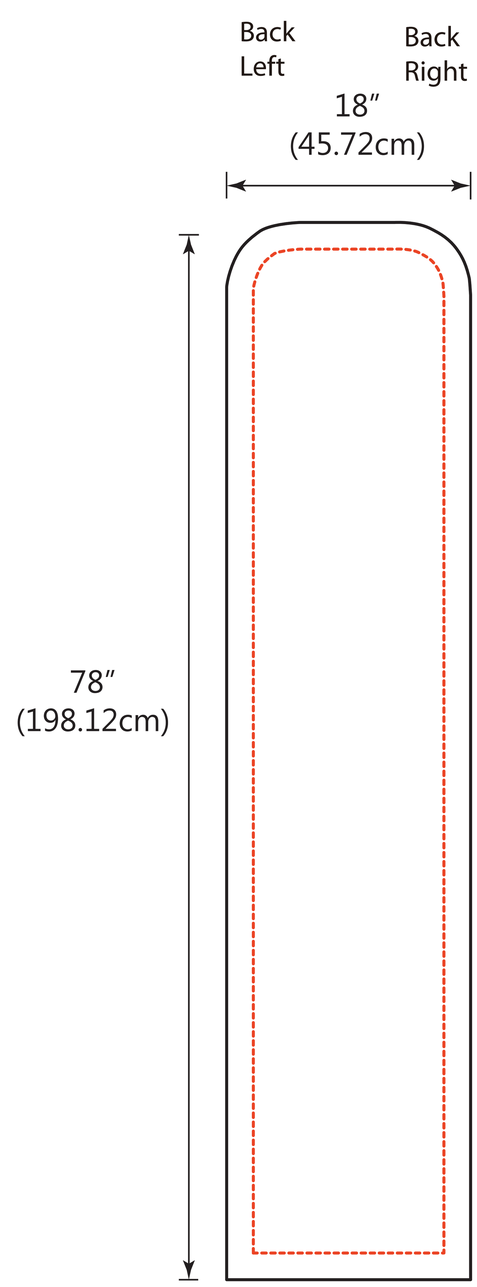
Back
Left
Back
Right
18″
(45.72cm)
78″
(198.12cm)